SERVO MOTOR

110 Series Motor Specification

Motor model	WE110M-12030S☆△	WE110M-15030S☆△	WE110M-18030S☆△
Rated power (kW)	1.2	1.5	1.8
Rated torque (N·m)	4	5	6
Rated speed (r/min)	3000	3000	3000
Brake	Optional	Optional	Optional
LA without Brake (mm)	189	204	219
LA with Brake (mm)	254	269	284

Remark:

☆: A1-17 bit single Magnetic encoder; C1-17 bit Multi Magnetic encode; D2- 23bit Multi Optical encoder
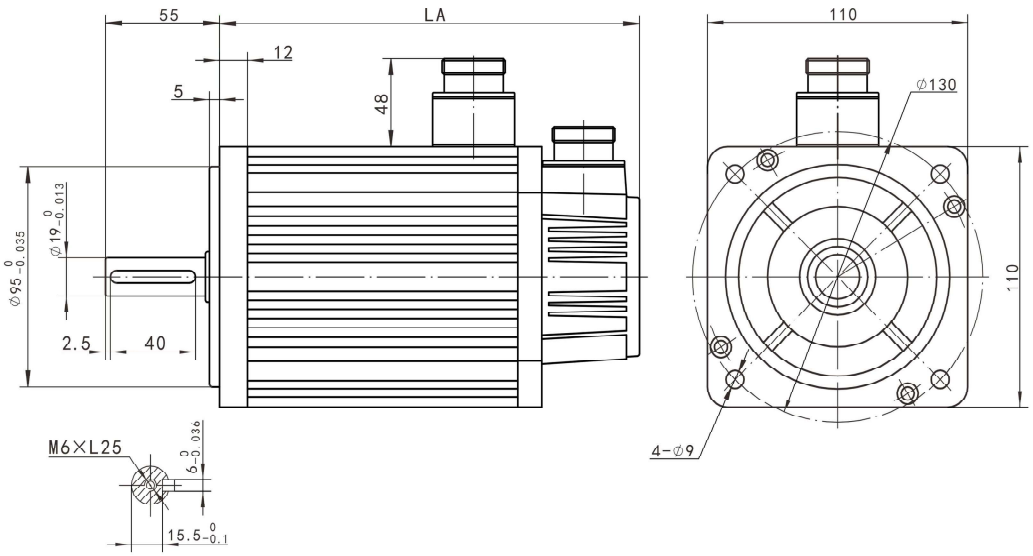
△: F-sealed; G-sealed & Brake